Mudr Perimeter 1 in. - Channel

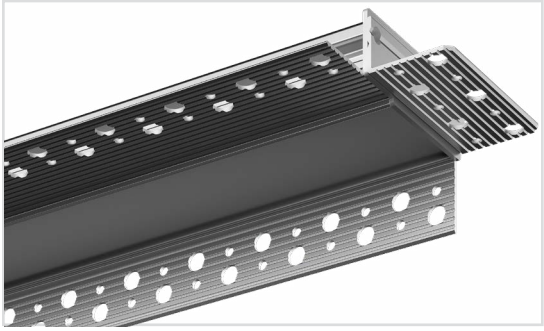

Mudr Perimeter 1 in. is a compact ceiling-mounted recessed cove channel with an illuminated reveal. It features a soft indirect light designed to flood a wall with light.

- Provides a completely recessed wall wash solution that does not interfere with rafters or other elements in the ceiling
- Designed to mount into a recess through drywall

Key Specifications:

- Linking system easily joins and aligns profile sections
- Paintable surface ensures seamless integration with any decor or color palette
- Sold in complete kits (4 or 7 ft.) to create a finished fixture in the field or custom lengths available through our build-to-order program

PRODUCT INFORMATION

Item Number	Description
AL-50-80-0111-KIT	Mudr Perimeter 1 in. - 4 ft. Kit - Mud-in Perimeter Profile for 5/8 in. Drywall - 1 in. Illuminated Opening - Anodized Aluminum Finish: 1 x 4 ft. Anodized Aluminum Channel, 1 x 4 ft. Frosted Diffuser Cover
AL-50-80-0115-KIT	Mudr Perimeter 1 in. - 7 ft. Kit - Mud-in Perimeter Profile for 5/8 in. Drywall - 1 in. Illuminated Opening - Anodized Aluminum Finish: 1 x 7 ft. Anodized Aluminum Channel, 1 x 7 ft. Frosted Diffuser Cover
AL-50-80-9912-CLR	Mudr Perimeter 1 in. - Clear PC Cover, 4 ft.
AL-50-80-9915-CLR	Mudr Perimeter 1 in. - Clear PC Cover, 7 ft.
AL-50-80-9951-AL	Mudr Perimeter 1 in. - Aluminum Finish End Caps Pair Pack: 2 Plated End Caps with Screws, 2 Mud-In End Caps with Flange and Screws
AL-50-80-9992-AL	Mudr Perimeter 1 in. - Straight Linker - 2 Pack. Includes 4 set screw and Allen key for easy installation
AL-50-80-9993-A	Mudr Perimeter 1 in. - L Shaped 90 Degree Linker for Mitred Corners - 2 Pack. Includes 4 set screws and Allen key for easy installation
AL-50-80-9994-AL	Mudr Perimeter 1 in. - L Shaped 90 Degree Flat Plate Linker for Beveled Corners - 2 Pack. Includes 4 set screws and Allen key for easy installation

This channel is compatible with select tape lights, for full compatibility see our guide: ***HERE***.

www.AlloyLED.com | Call: 800.910.LEDS [5337] | solutions@AlloyLED.com

Specifications subject to change without notice.

DIMENSIONS

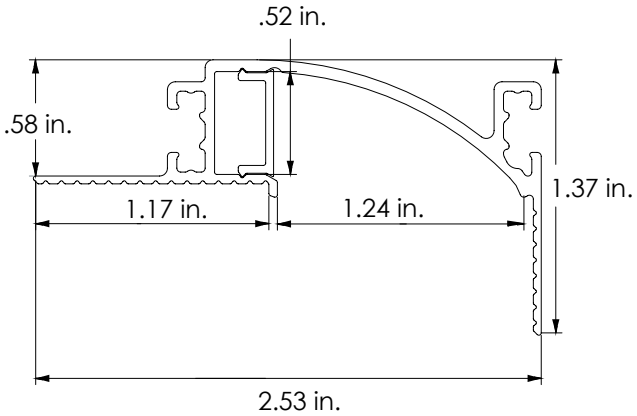

Mudr Perimeter 1 in.
AL-50-80-0111-KIT
AL-50-80-0115-KIT

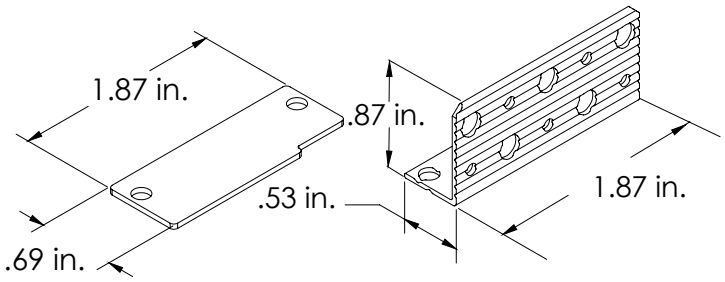

End Caps
AL-50-80-9951-AL

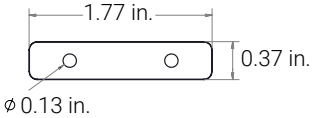

Straight Linker
AL-50-80-9992-AL

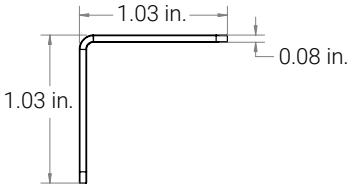

L Shaped 90 Degree Linker for Mitred Corners
AL-50-80-9993-AL

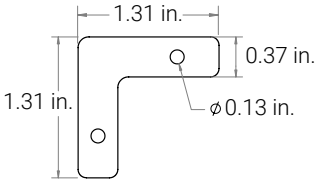

L Shaped 90 Degree Flat Plate Linker for Beveled Corners
AL-50-80-9994-AL

COMPLETE SOLUTION

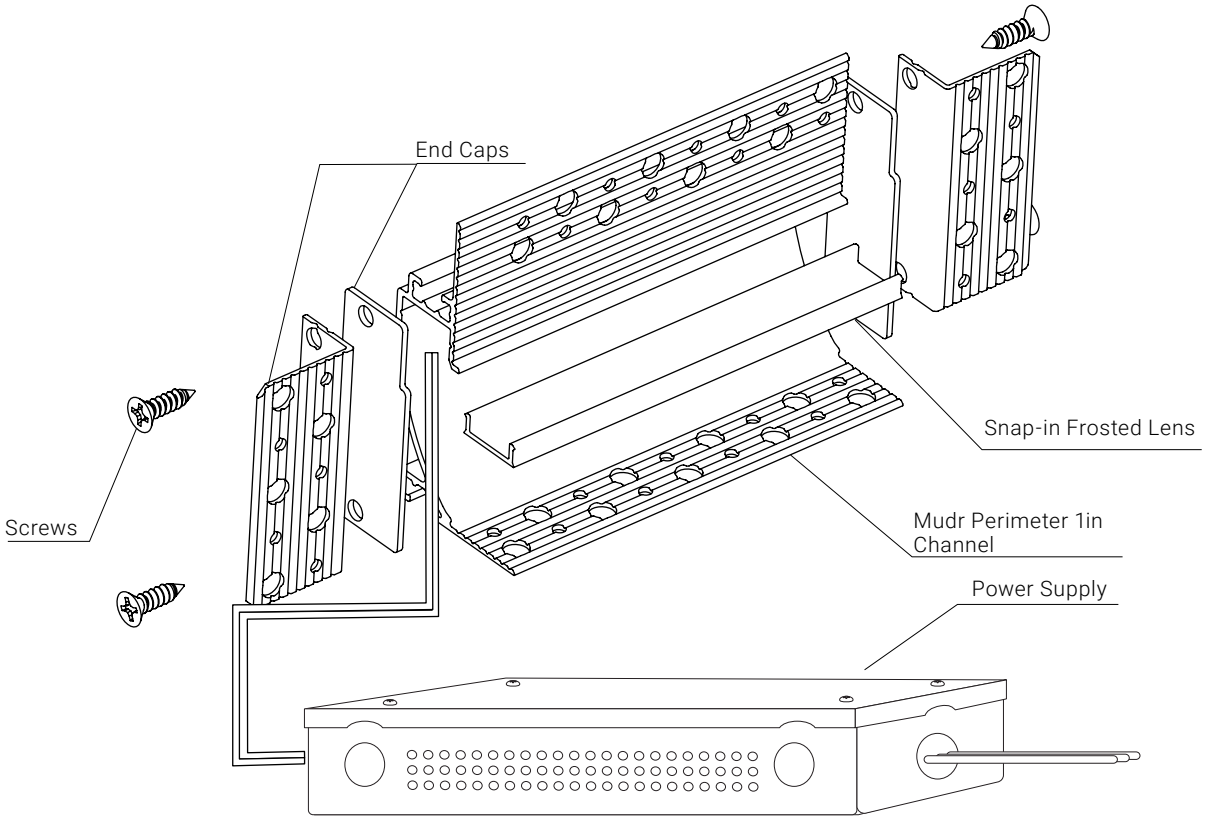

RECOMMENDED TAPE LIGHT (SOLD SEPARATELY)

Medium Output
PrimaLine 3 XT LED Tape Light

24V DC	Maximum Run = 40 ft.		Class 2 Maximum Run = 32 ft.	
20 ft. Spool	**40 ft. Spool**	**Color Temperature***	**Lumens / Foot**	**CRI**
AL-01-05-2401	AL-01-05-2421	2700K	207	98
AL-01-05-2402	AL-01-05-2422	3000K	234	98
AL-01-05-2403	AL-01-05-2423	4200K	240	96
AL-01-05-2404	AL-01-05-2424	5000K	244	96
AL-01-05-2408	AL-01-05-2428	3500K	191	97

High Output
PrimaLine 4.4 Gen 2 LED Tape Light

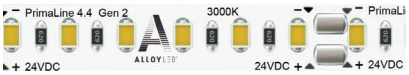

24V DC	Maximum Run = 26 ft.		Class 2 Maximum Run = 21 ft.		
26 ft. Spool	**50 ft. Spool**	**100 ft. Spool**	**Color Temperature***	**Lumens / Foot**	**CRI**
AL-01-15-2401	AL-01-15-2421	AL-01-15-2441	2700K	294	97
AL-01-15-2402	AL-01-15-2422	AL-01-15-2442	3000K	347	96
AL-01-15-2403	AL-01-15-2423	AL-01-15-2443	4200K	361	97
AL-01-15-2404	AL-01-15-2424	AL-01-15-2444	5000K	379	95

High Output
PrimaLine 5.5 LP LED Tape Light

24V DC / Maximum Run = 13 ft.				
13 ft. Spool	**26 ft. Spool**	**Color Temperature**	**Lumens per Foot**	**CRI**
AL-01-07-2411	AL-01-07-2431	2700K	457	98
AL-01-07-2412	AL-01-07-2432	3000K	465	97
AL-01-07-2413	AL-01-07-2433	4200K	477	97
AL-01-07-2414	AL-01-07-2434	5000K	462	96
AL-01-07-2418	AL-01-07-2438	3500K	459	98

RECOMMENDED POWER SUPPLIES (SOLD SEPARATELY)

ALLOY'S TOP CHOICE

Alloy LED PowerFactor™ Dimmable Power Supplies with Integrated UL Listed Junction Box

Compact, highly efficient, and code-compliant power supply with versatile and smooth dimming capabilities.

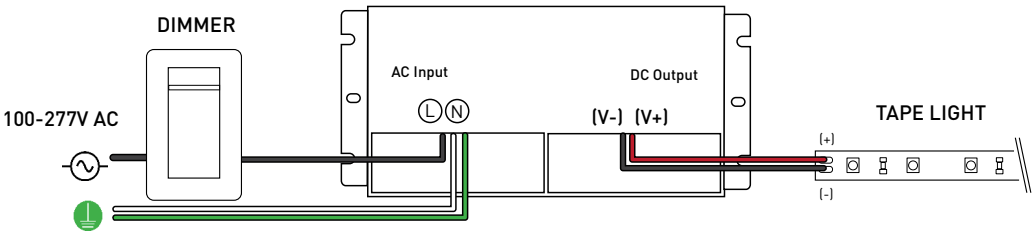

Wiring diagram is for reference only. Please refer to dimmer wiring specifications sheet for accurate directions.

99% POWER FACTOR · 120V-277V · DRY LOCATION · WET LOCATION · NEMA 4X · WARRANTY 6 YEARS · Can Be Used To Comply With Title 24 JA8 - 2019 · c UL us LISTED · RoHS

Single Tap Models

Item Number	Output Voltage	Wattage	Wet Location	Minimum Load	Dimensions (L x W x H)	Class 2
AL-98-10-12030	12V DC	30W	Yes (NEMA 4X)	10%	6.50 x 3.72 x 1.02 in.	Yes
AL-98-10-12060	12V DC	60W	Yes (NEMA 4X)	10%	7.40 x 3.72 x 1.02 in.	Yes
AL-98-10-12120	12V DC	120W	Yes (NEMA 4X)	10%	8.66 x 3.72 x 1.57 in.	No
AL-98-10-24030	24V DC	30W	Yes (NEMA 4X)	10%	6.50 x 3.72 x 1.02 in.	Yes
AL-98-10-24060	24V DC	60W	Yes (NEMA 4X)	10%	7.40 x 3.72 x 1.02 in.	Yes
AL-98-10-24096	24V DC	96W	Yes (NEMA 4X)	10%	8.66 x 3.72 x 1.57 in.	Yes
AL-98-10-24150	24V DC	150W	Yes (NEMA 4X)	10%	10.24 x 4.13 x 1.77 in.	No
AL-98-10-24200	24V DC	200W	Yes (NEMA 4X)	10%	10.24 x 4.13 x 1.77 in.	No
AL-98-10-24300	24V DC	300W	Yes (NEMA 4X)	10%	10.94 x 4.33 x 1.77 in.	No

Class 2 Compliant Multi-Tap Models

Item Number	Output Voltage	Wattage	Wet Location	Minimum Load	Dimensions (L x W x H)	Class 2
AL-98-10-12300-MT	12V DC	300W	Yes (NEMA 4X)	10%	11.85 x 4.33 x 1.77 in.	Yes
AL-98-10-24192-MT	24V DC	192W	Yes (NEMA 4X)	10%	10.94 x 4.33 x 1.77 in.	Yes
AL-98-10-24288-MT	24V DC	288W	Yes (NEMA 4X)	10%	11.85 x 4.33 x 1.77 in.	Yes

Note: PowerFactor assumes 80% load.
Inspectors prefer power supply to be used with junction box.
For dimmer compatibility, refer to drivers specification sheet.

RECOMMENDED POWER SUPPLIES (SOLD SEPARATELY)

Alloy LED Primavolt® No Minimum Load Dimmable Power Supplies with ETL Listed Junction Box

Code-compliant power supply with versatile and smooth dimming capabilities. Compatible with Incandescent, On/Off, ELV and MLV dimmers.

Dry Location Model
White model for 60W and lower

Wet Location Model
Black model for 80W and higher

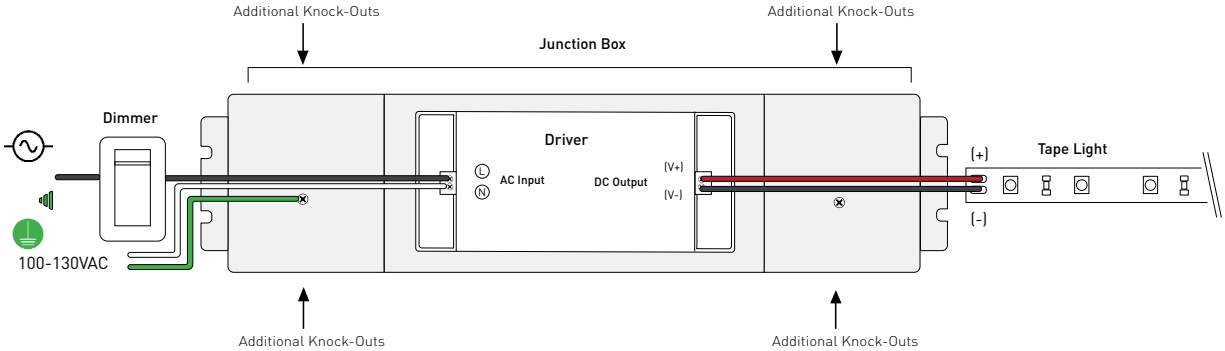

Wiring diagram is for reference only. Please refer to dimmer wiring specifications sheet for accurate directions.

Item Number	Output Voltage	Wattage	Minimum Load	Dimensions (Junction Box) (L x W x H)	Class 2
AL-98-03-12024-NM	12V DC	24W	0%	13.78 x 3.03 x 1.46 in.	Yes
AL-98-03-12048-NM	12V DC	48W	0%	13.78 x 3.03 x 1.46 in.	Yes
AL-98-03-12060-NM	12V DC	60W	0%	13.78 x 3.03 x 1.46 in.	Yes
AL-98-03-12080-NM	12V DC	80W	0%	14.96 x 3.03 x 2.24 in.	No
AL-98-03-12120-NM	12V DC	120W	0%	14.96 x 3.03 x 2.24 in.	No
AL-98-03-24024-NM	24V DC	24W	0%	13.78 x 3.03 x 1.46 in.	Yes
AL-98-03-24048-NM	24V DC	48W	0%	13.78 x 3.03 x 1.46 in.	Yes
AL-98-03-24060-NM	24V DC	60W	0%	13.78 x 3.03 x 1.46 in.	Yes
AL-98-03-24080-NM	24V DC	80W	0%	14.96 x 3.03 x 2.24 in.	Yes
AL-98-03-24096-NM	24V DC	96W	0%	14.96 x 3.03 x 2.24 in.	Yes
AL-98-03-24150-NM	24V DC	150W	0%	15.98 x 3.43 x 2.36 in.	No
AL-98-03-24200-NM	24V DC	200W	0%	15.98 x 3.43 x 2.36 in.	No

Note: Alloy LED strongly recommends using Listed Class 2 power supplies for all installations.
Always install in accordance with local and national electrical code regulations.
Inspectors prefer power supply to be used with junction box.
For dimmer compatibility, refer to drivers specification sheet.

RECOMMENDED POWER SUPPLIES (SOLD SEPARATELY)

ELV Dimmable Power Supplies for Remote Enclosures

The drivers are derated, but when installed in a small enclosure with no heatsink or air circulation, we recommend a maximum load of 40W.

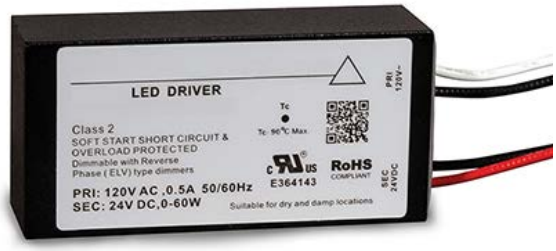

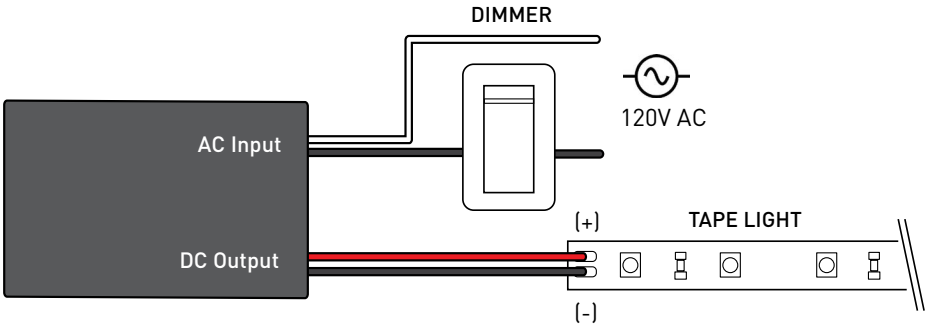

Wiring diagram is for reference only. Please refer to dimmer wiring specifications sheet for accurate directions.

Item Number	Output	Wattage	Dimensions (L x W x H)	Class 2
AL-98-08-12060	12V DC	60W	2.66 x 1.30 x 0.83 in.	Yes
AL-98-08-24060	24V DC	60W	2.66 x 1.30 x 0.83 in.	Yes

Note: Inspectors prefer power supply to be used with junction box.
For dimmer compatibility, refer to drivers specification sheet.

DIMMING ACCESSORIES (SOLD SEPARATELY)

Lutron® Dimming Accessories

By participating in Lutron's OEM Advantage program, Alloy LED is able to offer a range of the highest quality low voltage power supplies and selected controls on the market.

Hi-lume Premier 0.1% EcoSystem / 3-wire LED Driver (96W 24VDC)

Hi-lume 1% LED Driver 40W
- EcoSystem / 3-wire control
- 2-wire 120V forward phase control

Lutron Vive PowPak RF Module
- RF module for EcoSystem LED driver control
- Use with the Lutron EcoSystem drivers shown to "Vive-enable" Alloy LED products

Lutron® Hi-lume LED Drivers

Item Number	Output	Wattage	Minimum Load	Class 2
AL-98-07-12040	12V DC	40W	N/A	Yes
AL-98-07-12040-3WIRE	12V DC	40W	N/A	Yes
AL-98-07-24040	24V DC	40W	N/A	Yes
AL-98-07-24040-3WIRE	24V DC	40W	N/A	Yes
AL-98-07-24096-3WIRE	24V DC	96W	N/A	Yes

Lutron® Controls

Item Number	Description	Voltage
AL-98-07-9901	EcoSystem Control Module	N/A
AL-98-07-9901-8	EcoSystem Control Module - 8 pack	N/A
AL-98-07-9950	CL Dimmer	120V AC
AL-98-07-9950-FPLATE	CL Dimmer faceplate	N/A

DIMMING ACCESSORIES (SOLD SEPARATELY)

Dimmers and Switches

SlimDim Wireless Dimmer Switch

Using long-range RF technology, these LED dimmers connect wirelessly to a receiver, offering freedom to mount anywhere. Can also be used as a fob for mobile, hand-held control.

AL-70-01-0001	SlimDim Wireless Dimmer
AL-70-01-0002	Single Color Receiver (96W max.) (sold separately)
AL-98-07-9950 -FPLATE	SlimDim Wall Plate (sold separately)

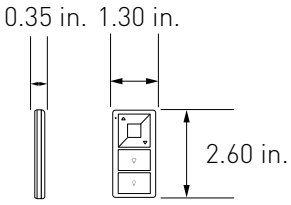

SlimDim Wireless Dimmer

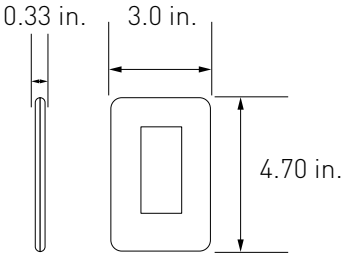

SlimDim Wall Plate (Sold Seperately)

Remote Control Dimmer Switch

Provides full dimming and on/off control, and includes a touch wheel that allows for direct visual selection of brightness. It can also operate up to four independent zones.

AL-60-03-0001	Remote Control Dimmer Switch
AL-70-01-0002	Single Channel Receiver (sold separately)
AL-60-03-0004-V2	Wireless Receiver (RGB & RGBW) (sold separately)

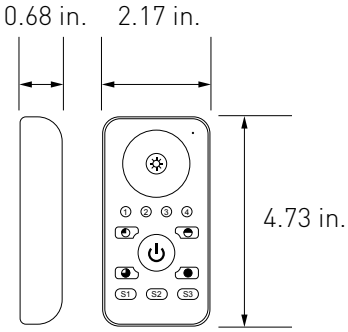

Single Channel Wireless Receiver

Pair with the Remote Control Dimmer Switch or the SlimDim Wireless Dimmer to dim PrimaLine tape lights. Use one remote to make independent lighting zones with multiple receivers with certain controllers.

AL-70-01-0002	Single Channel Wireless Receiver

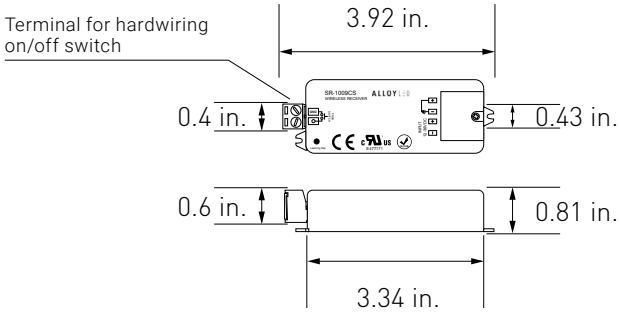

WIRING DIAGRAM

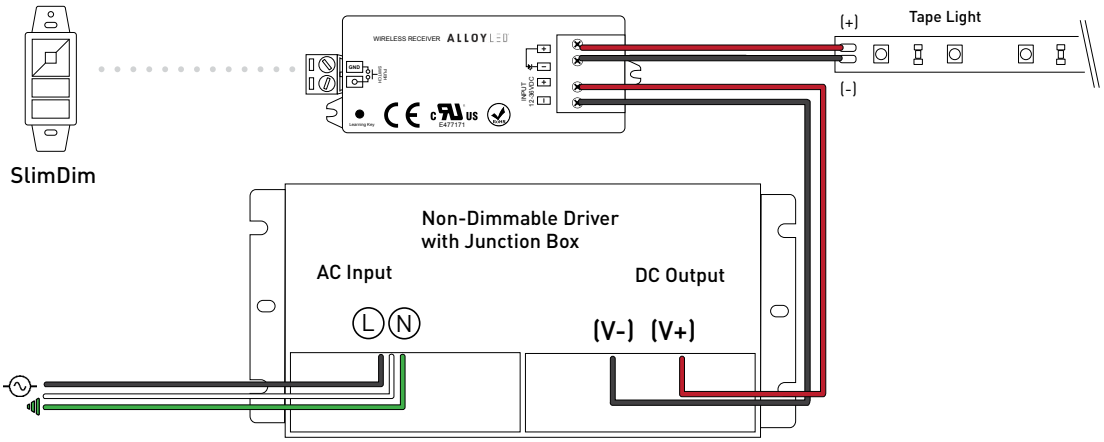

RECOMMENDED POWER SUPPLIES (SOLD SEPARATELY)

Alloy LED TRIAC/MLV/ELV Dimmable Drivers for Remote Locations

Offers stable power in even in the most remote settings. Compatibility with TRIAC, ELV, or MLV dimmers.

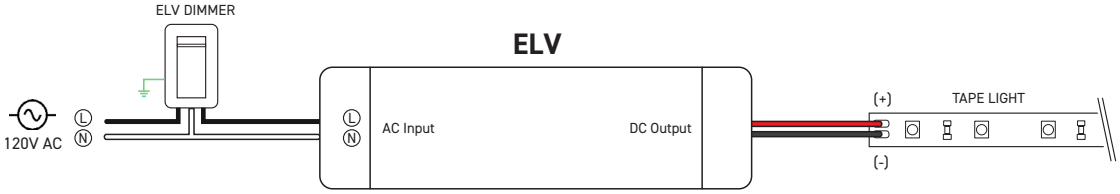

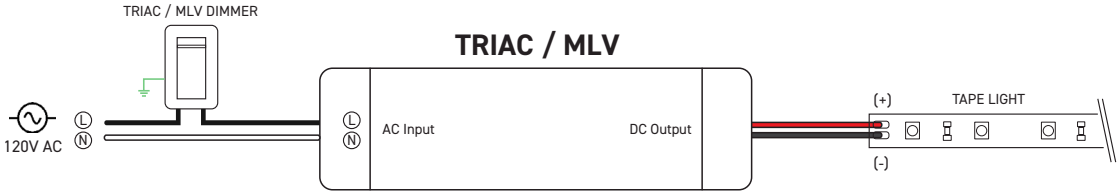

Wiring diagram is for reference only. Please refer to dimmer wiring specifications sheet for accurate directions.

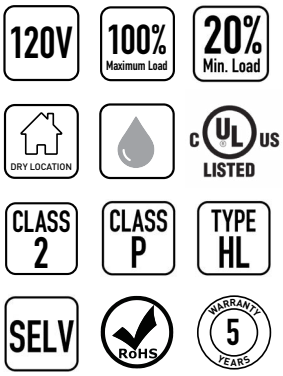

Item Number	Output Voltage	Wattage	Dimensions (L x W x H)	Class 2
AL-98-09-12060	12V DC	60W	3.31 x 1.57 x 0.98	Yes
AL-98-09-24096	24V DC	96W	3.31 x 1.57 x 0.98	Yes

Note: Alloy LED strongly recommends using Listed Class 2 power supplies for all installations.
Always install in accordance with local and national electrical code regulations.
Inspectors prefer power supply to be used with junction box.
For dimmer compatibility, refer to drivers specification sheet.